Constant Flow Land Inflatables Operation Manual for:

Owners/Controllers

Those who have overall control of the equipment and who are responsible for its inspection & maintenance.

Operators

Those persons aged 18 and over appointed by the owner /controller to be in charge of the day to day operation of the equipment, when intended for public use.

Attendants

Those persons aged over 16 working under the directions of the owner, controller or operator to assist in the operation of the equipment.

AIRQUEE.COM

PRODUCT INFORMATION	
Name	
Type	
Product Code	
Serial Number	
Tag Number	
Weight	

KEEP FOR FUTURE REFERENCE!

About Us

We are Airquee - pronounced 'Air-key' - a design based manufacturer driven by customer needs. We have over 35 years combined experience of creating new and exciting inflatable products for the world to enjoy. We are continually pushing the boundaries in design and construction, culminating in the ability and confidence to create exciting, interesting, and unusual products for our customers whilst still offering excellent value for money. Over 10 years ago Airquee achieved worldwide recognition for the design and production of the world's first inflatable pub later followed by the majestic church. Since then Airquee has gained the reputation of the most innovative inflatable manufacturer in Europe and at every exhibition people flock to our stand to see the newest creation!

Airquee is one of very few suppliers in Europe who manufacture all of our inflatables in-house. Not only does this provide the best possible quality control but also offers the benefit of complete flexibility when deadlines are tight or a unit is needed urgently - Airquee can deliver! With short lead times and competitive prices, Airquee has the expertise and experience to offer each and every customer the complete package to suit them.

We have an international distribution network so please call for information specific to your country.

Our Range

Bouncy castles, swimming pool inflatables, air buildings, promotional inflatables, inflatable games for all ages, football and rugby equipment and training aids, tennis and golf games, industry accessories and much more! If you can imagine it, Airquee can make it!

We are influential members of all relevant inflatable safety organisations. This is extremely important to us as these bodies are in place to help develop, enforce and maintain the highest safety standards in the design, manufacture and operation of inflatables in the industries we serve.

Repairs and Testing

We can repair and inspect any inflatable either at our Cwmbran centre or at your site*!
We can help you with any problem, for inflatables, trampolines, gym equipment, sports hall curtains, netted sports equipment, soft play and anything else you want to challenge us with!
Airquee's repair department can provide both on-site and return-to-base options.

We employ RPII Inspectors in the UK, as well as local subcontractor RPII Inspectors and offer RPII/BS EN14960:2019 inspections, PIPA tagging and certifications, annual health and safety checks and repairs for all kind of inflatables. Please call for details, help or advice.
*subject to customer location and availability.

Our Factory

At a time when many companies are importing products, Airquee is in the fortunate position of owning its own manufacturing facility which is the largest inflatable manufacturing operation in Europe employing over 200 people. We use some of the most advanced technologies in the industry in our design, cutting, printing and stitching functions. This gives Airquee the following important advantages:

1) Competitive prices;
2) Consistent manufacturing quality;
3) Quick delivery times;
4) Any design is possible.

Airquee is recognised by all major industry standards:

Duel House,
Llandowlais Street,
Cwmbran NP44 7XB, UK
Tel: +44 (0)1179 414 918
Email: sales@airquee.co.uk

CONTENTS

1. Introduction 3
2. Conformity and standards 3
3. Product description 3
4. Quality of manufacture and design 4
5. Continuous flow principle 4
6. Safe handling 4
7. Hazards relating to electrical equipment 4
8. Changing a fuse in a plug (UK plugs only) 5
9. Setting up outdoors 6
   - 9.1 Inclusions 6
   - 9.2 Extra equipment you could consider for your new inflatable 6
   - 9.3 Siting of the inflatable 6
   - 9.4 Positioning of perimeter fence 6
   - 9.5 Clear area around an inflatable 7
10. Check wind speed 7
11. Cold hazard 7
12. Assembly & erection procedures 8
    - 12.1 Positioning 8
    - 12.2 Unrolling & unfolding 8
    - 12.3 Fan connection 8
13. Anchoring and use of anchor points 8
    - 13.1 Anchor points 8
    - 13.2 Driving anchor pegs into the ground 9
    - 13.3 Anchor rope knot 9
    - 13.4 Temporary anchoring and inflation 10
    - 13.5 Final adjustment checks and permanent anchoring 10
    - 13.6 Connecting multiple parts 10
14. Check the working pressure 11
15. Use of landing/crash mats 11
16. Setting up indoors 11
    - 16.1 Is the proposed space suitable? 11
    - 16.2 Does the inflatable need to be anchored? 11

Airquee® Inflatable & Softplay Products

16.3 Where is the impact area? 12
16.4 Protecting the base 12
16.5 Keep the fan still and in position 12
16.6 Fire precautions 12
16.7 Alarms 12
16.8 Means of escape - Emergency Exits 13
16.9 Emergency lighting 13
16.10 Indoor Use 13
17. Packing the equipment away 14
17.1 Preparing the inflatable for packing away 14
17.2 Folding the inflatable 14
17.3 Rolling the inflatable 15
18. Routine inspection 15
19. Operating 16
19.1 Useful things to carry with you 16
19.2 Personnel 16
19.3 Training 16
19.4 Operating Guidelines/Rules of Play 17
19.5 System of work 17
19.6 Example system of work 18
19.7 Attendant's duties 18
19.8 Operator's duties 18
19.9 Take a break 19
19.10 Emergencies 19
19.11 Cleaning & hygiene 20
20. Maintenance, service and inspection procedures 20
20.1 Daily inspection schedule 20
20.2 Annual inspections 20
21. Running repairs 20
22. Warranty - What it covers 21
23. Disposal 21
24. Slides 21
25. Obstacle Courses 23
26. "Disco Ready" feature 23
27. Risk Assessment 24
Log book 28

Airquee® Inflatable & Softplay Products

IMPORTANT: We advise all owners/controllers of inflatables to obtain and study EN14960-1:2019 - Inflatable Play Equipment - Safety Requirements and Test Methods. In addition, we strongly recommend that you carry out your own risk assessment relating to the setup and operation of such products.

1. INTRODUCTION

This manual contains Airquee official manufacturer's instructions for owners/controllers of land based inflatable equipment.

This manual gives general recommendations for operating constant flow inflatables. There may be additional operating instructions or recommendations for some inflatable products. These will be enclosed with the product and/or emailed. You should also familiarise yourself with all relevant Regulations and Codes of Practice under the laws of the country where the inflatable is used.

Due to continual innovation and development the latest version of this manual may contain additional information to this one. You may download the latest version of this manual at https://airquee.com/en/manuals.

As the owner/controller it is your responsibility to carry out your own risk assessments and to give instruction to all operators, attendants and users in the proper safe use of the inflatable. It is strongly recommended that you read this manual before attempting to set up, dismantle or operate the equipment to which it relates, even if you have used similar equipment before.

Any misuse or failure to adhere to the instructions and recommendations contained in this manual and any additional instructions will render void the warranty.

This manual is provided for information purposes only. Nothing in this manual is to be construed in any way as varying the terms of sale of the goods to which it applies. All the information included in this manual is subject to change without notice. Reasonable care has been taken when preparing the contents of this manual. However, Airquee accepts no responsibility for any error or omission or misuse.

2. CONFORMITY AND STANDARDS

For the purposes of this instructional manual, it is assumed that sometime in the previous 12 months, the inflatable and its accessories have been tested and passed in compliance with the European Standard EN 14960:2019 Inflatable Play Equipment – Safety Requirements and Test Methods. This can be accomplished by submitting the equipment to a registered Pertexa Inflatable Play Accreditation (PIPA) scheme inspector (who has been examined and registered as competent by the Register of Play Inspectors International (RPII). Airquee has PIPA registered inspectors who can carry out this test. We strongly recommend that the item undergoes a health and safety test every 12 months.

The used materials are non-toxic REACH compliant and certified fire retardant to the most widely used european standards like the British BS5438 and BS5867, the German DIN 4102 (B1), the French NF P 92 507 (M2) or even the American NFPA 701.

3. PRODUCT DESCRIPTION

Bouncy castles are one of today's most popular children's entertainments. Their portability and low cost have ensured their favour with operators, as well as children and their parents. There are now many types of inflatable play equipment including bouncers, mazes, games, obstacle courses and swimming pool inflatables, for use by children, teenagers and adults.

Bouncy castles are the generic term used in the UK for inflatable play equipment. Inflatables were introduced in the UK in the late '60's from America. They were originally developed for disabled children as it offered a way for kids to play physically without hurting themselves. Early models sold in the UK were castle shaped and even today this style is still being produced.

All Airquee inflatables have the following common traits:

- They are made of PVC coated reinforced flexible polyester or nylon fabric.
- When packed away the volume of space they take up is a fraction of their inflated size.
- An average bouncy castle can be set up in a matter of minutes and usually packed away within 15 minutes.

4. QUALITY OF MANUFACTURE AND DESIGN

Airquee has invested heavily in the latest Computer Assisted Design and Manufacturing equipment (CAD/CAM). This has enabled Airquee to lead the field by developing the newest designs, to capture the imagination of children and adults alike.

One of the benefits of this high level of computerisation is the accuracy of fabric cutting. This in turn enables us to produce the most consistent quality of product in the leisure inflatable industry. Airquee operates its own European state of the art manufacturing facility to maintain its quality at the highest levels.

Airquee inflatables are all made in our own factory from the highest quality fire retardant reinforced PVC coated fabric, manufactured to own our specifications. Constructed from polyester or nylon weave thickly coated on both sides with PVC, resulting in an extremely robust material made with a cape or gloss finish. The material is machine stitched together with a minimum of two lines of stitching using a rot resistant nylon thread. Exposed seams such as those on a bed of a bouncer are reinforced with additional PVC or webbing strips.

5. CONTINUOUS FLOW PRINCIPLE

As the structure is held together by stitched seams, air will always escape from the hundreds of perforations produced during stitching. These perforations will inevitably increase in size during the working life of the inflatable. Air must be continuously supplied under pressure to keep the inflatable properly inflated, thus the fan requires an uninterrupted power source while in use. This is the “continuous flow” principle. Inflatables are usually supplied with one or more electrically powered fans, depending on the size of the inflatable, but can be ordered with a petrol (or propane gas) powered fan as an option, if permitted on site.

6. SAFE HANDLING

Before attempting to unload, move, site, inflate or use Airquee inflatable equipment you should read the contents of this manual and any additional operating instructions thoroughly. Free advice is also available by telephone from the company’s after sales support team on +44 (0)1179 414 918. They will do their best to answer any technical or health and safety related questions you may have.

It is vital to have enough helpers to carry out loading, unloading, setting up/assembly and dismantling to prevent individuals hurting themselves. You have a legal duty to assess and eliminate or reduce the risk of injury to employees which can result from manual handling operations. This applies to all operations involving transporting, loading, unloading, setting up, dismantling, packing or moving inflatables. For further information please see the HSE Code of Practice entitled: HSE Guidance on Regulations L23 (Manual Handling Operations 1992).

Inflatables can be very heavy, especially if allowed to become wet and they require some care in their handling to avoid injuries. The first requirement for safe handling is that the inflatable is folded and rolled properly after use. A good, hard roll, flat at both ends, is much more easily handled than a poorly rolled and floppy inflatable. It can be handled and moved on a 2-wheeled sack barrow and easily bowled over onto a truck or trailer.

Do not try to lift a complete inflatable. Lift only one end at a time. When the rolled inflatable is lying down, take up a squat position, lean a shoulder into the end and push with the legs. Your leg muscles are the strongest you have and will lift the inflatable onto its end. It can then be easily moved using the sack barrow. When loading the inflatable onto a truck or trailer, stand it up on its end close to the truck or trailer, lean the top onto the edge of the platform and then lift the bottom end and bowl it over.

7. HAZARDS RELATING TO ELECTRICAL EQUIPMENT

The use of portable electrical equipment involves the potential risk of electric shock, burns or fire. A major cause of accidents is failure to maintain equipment. The risk can be managed effectively if sensible and appropriate rules for use and maintenance are applied.

The electric fan supplied for the inflatable should only be used with the electricity supply specified for that fan. Connecting the fan to a non-specified electricity supply is very dangerous and will render the warranty void. Each fan is fitted with a motor which operates at the nominal mains electricity voltage in the country in which it was supplied for. In the UK and Europe, it is 220-240 volts 50hz A/C. Airquee can supply fans to other electrical supply specifications where necessary.

CAUTION! Precautions to be taken during handling and use of the fan to prevent electric shock. Operating the fan requires a **Ground Fault Protected Circuit** (GFCI). Read the manufacturer's Instruction Manual before using it.

Using electrical equipment in wet or damp conditions can be dangerous. If an electrically powered fan is to be used outdoors an RCD (Residual Current Device) adapter or plug should be used. By redirecting electrical current through the main's earth, it helps to prevent electric shock to the person if there is an electrical fault. RCD's are available from Airquee or your local/chosen electrical store. The inflatable usually plugs into the indoor mains sockets and the plug from the fan cable is plugged into the RCD. Alternatively, a plug containing an RCD device can be fitted permanently to the fan cable. Before each use you should check that the RCD device is actually working, using the test button provided. All electrical connections should be protected against water ingress.

If an extension lead is to be used, ensure that it is capable of carrying 13amps. Cables should not be in a position where people can trip over them and if used outdoors, they must be IP rated accordingly. The fan should be PAT tested before or after every use. Hand held fans should only be used by the operator and should be kept away from the public.

IMPORTANT: Your fan is classed as a portable appliance unless it is in a permanent fixed position. It is therefore necessary to PAT test your fan after every use. Extension leads should also be checked and tested.

8. CHANGING A FUSE IN A PLUG (UK PLUGS ONLY)

Fans supplied by Airquee employ an overload protection which is a fuse integrated in the plug of the product. If a fan lost power and there appears to be no problem with it or the supply of electricity, try changing the fuse in the plug, as it may have blown. In order to avoid this problem, the best practice is to only use the fan with a tested earthed electrical supply, preferably with a suitable RCD (Residual Current Device) fitted.

DISCLAIMER: If a fan is returned to Airquee under warranty and its only defect is a blown fuse, a charge will be applied.
WARNING: Unplug or disconnect the appliance from the power supply before servicing the fuse!

When it comes to fuses, there are 2 types of plugs used in Airquee supplied fans:

1) The fuse hidden inside the plug. Accessible only by unscrewing the back of the plug.



2) The fuse is placed in an exterior slot on the plug.

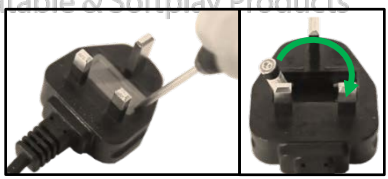

Check what rating the fuse should be and replace it with the same rated fuse. If in doubt, check the appliance's instructions or ask the manufacturer. Simply snap the old one out with the help of the screwdriver and place the new fuse on top of the copper holders and apply a small force to pop the fuse in its place.

TESTING FUSES

The easiest way to test a fuse is to replace it with a similar BS 1362 compliant 13A fuse. If the fan starts working again, you know you have a blown fuse. If the fan is still not working after you changed the fuse, it could still happen that the new fuse is bad. The most reliable method of testing a fuse is to apply a small current on its 2 ends with the help of a digital multimeter. This shows if the resistor in the fuse has continuity or not. Note: A blown fuse will have absolutely no continuity at all.

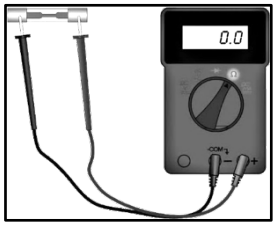

Airquee® Inflatable & Softplay Products

9. SETTING UP OUTDOORS

9.1 INCLUSIONS

Every inflatable comes with these basic inclusions. The final number and type of the supplied inclusions changes with every specific product and depends on the model of the product and/or on your individual requirements. Any additional inclusions are listed in the *Additional Operating Instructions* of that particular product.

The Inflatable(s) in a Bag	Anchor Pegs	*Anchor Ropes
		

*Anchor ropes are only supplied for inflatables equipped with high level anchor points.
The number and type of inclusions depends of your inflatable model.

The instructions manual can be downloaded here: https://airquee.com/en/manuals. For details about dimensions, weight, zips, filler pipes and anchoring points please see the visuals received for confirmation, and the email with the finished pictures link.

9.2 EXTRA EQUIPMENT YOU COULD CONSIDER FOR YOUR NEW INFLATABLE

- Ground sheet to protect the underside of your inflatable.
- Sandbag covers to anchor your inflatable indoors.
- Sack truck to move your inflatable safely.
- RCD to attach to your extension lead.
- Crash mats.
- Fan cover boxes.

Airquee®
Inflatable & Softplay Products

9.3 SITING OF THE INFLATABLE

To find the best position of your inflatable please take these points into consideration:

- The site must be level or have a slope of not more than 5 degrees in any direction.
- The site must be cleared of debris and sharp objects either on or embedded in the surface.
- Always ensure products are setup with a 360º all-round clearing so that they do not rub against walls, plants, trees, street lights etc. The inflatable must be sited well away from possible hazards such as overhead power lines.
- Check for any underground services (e.g. signs of excavation) before driving the pegs in. Ensure your pegs are the industry standard of 38cm long, so there should be no chance of driving them into any underground cables, pipes etc.
- If the hard standing is abrasive you must use a groundsheet under the inflatable to avoid damage to the base.
- Remember colours last longer in the shade (especially true for printed panels).

If the inflatable is to be sited on hard standing then follow the instructions on page 8, section *12.3. Temporary anchoring and inflation*.

9.4 POSITIONING OF PERIMETER FENCE

If, for crowd-control purposes, a perimeter fence is used, it must be at least 1.8m from walled sides and at least 3.5m from open sides. The gateway must be 1.0m wide.

Key:
1. At least 1.8m
2. Walled side
3. At least 3.5m
4. Open side
5. 1m Gateway

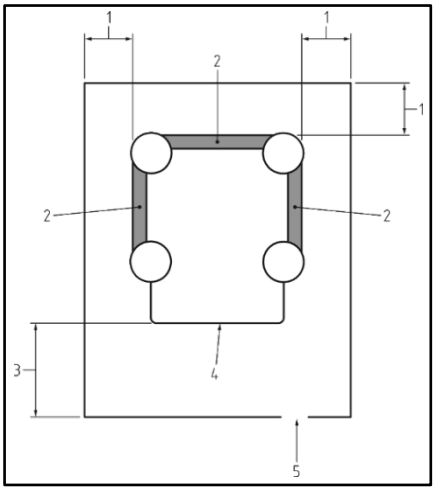

9.5 CLEAR AREA AROUND AN INFLATABLE

A clear area must be maintained around the inflatable. The extent of this clear area is established by dividing the height of the highest platform by 2. However, the clear area must be at least 1.8m.

Key:
x = height of highest platform
y = extent of clear area
(dimensions in metres)

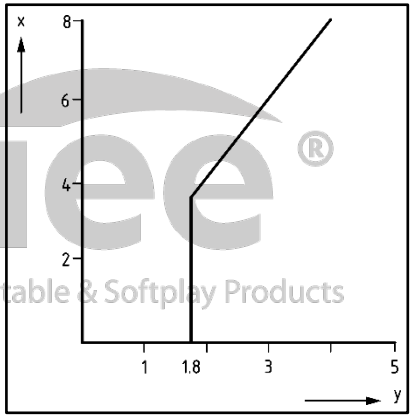

An exception to this rule is when an inflatable with inflated walls is sited directly against a solid wall or walls, for example the walls of a building. In such a case, the solid wall(s) must be 2m higher than the highest platform height. Use of this exception must not result in the creation of additional hazard.

Airquee® Inflatable & Softplay Products

10. CHECK WIND SPEED

It is not allowed to use an inflatable by a higher wind force than force 5 on the Beaufort scale of 28 - 38 kmph (19-24 mph). Force 5 is a fresh breeze when small trees in leaf begin to sway, whereas Force 6 is a strong breeze when large branches are in motion, whistling can be heard in telephone lines and umbrellas can only be handled with difficulty. Weather forecasts can be obtained from the Meteorological Office and small handheld anemometers are now available through a number of trade suppliers and manufacturers. (See Annex B of EN 14960-1:2019 for the Beaufort Scale).

11. COLD HAZARD

The fabric of the inflatable can be easily damaged if the inflatable is unrolled or inflated whilst in a very cold or frozen state. This may occur if the inflatable is exposed to low or freezing temperatures whilst in storage or transit. The coated fabric loses its flexible character at 3 degrees c or below. In that very cold state the fabric may crack during movement or inflation. Any resulting damage is not covered by the Airquee warranty. If the inflatable is found to be too cold for use it must be allowed to warm up gradually until the fabric regains its normal flexible character.

12. ASSEMBLY & ERECTION PROCEDURES

Airquee inflatables are designed to be erected and dismantled quickly and safely, following the recommendations in this manual. The inflatable itself will be supplied rolled up with the filler and outlet pipe (if applicable) on the outside. The inflatable will be wrapped for transport.

12.1 POSITIONING

Your inflatable will have been rolled so that the filler pipes are at the beginning i.e. the first part which begins to unroll. The inflatable should be positioned so that when it is unrolled the filler pipe will be in roughly the right position in relation to where the fans will be situated.

12.2 UNROLLING & UNFOLDING



It is advisable to make a note of the width of the roll before starting the process of unrolling and unfolding the inflatable; this information will be useful when you come to pack away. Once you are happy with the position of the inflatable untie the rope securing the bundle and start to unroll. When it is completely unrolled, then you can unfold until it is fully laid out.

12.3 FAN CONNECTION

The fan should be attached to the most convenient filler pipe. There is a strap with a cam buckle on the end of all filler outlet pipes. The cam buckle is opened by pushing down the lever on the buckle, and the other end of the strap can be passed through from the underside of the buckle. The strap must not be twisted and protrude at least 5cm through the buckle.

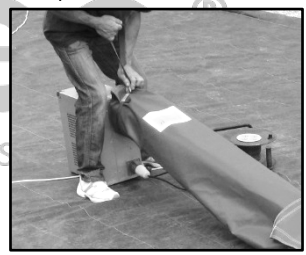

The filler tube with the strap, and buckle encircling, it is put over the plastic cone on the fan. The tube should completely cover the cone and the strap, the cam buckle should be as near to the narrow part of the fan cone as possible. With the filler pipe straight, the strap should be pulled through the cam buckle until the strap is tight (Fig. 4). All zips should be closed, all additional filler pipes tied off and pushed back inside the inflatable, and the cover flap, if fitted, replaced.

13. ANCHORING AND USE OF ANCHOR POINTS

13.1 ANCHOR POINTS

Your inflatable will be fitted with low level anchor points. High level anchor points may be fitted depending on the type and height of the inflatable. When anchoring, **you must use (anchor) all the anchor points (both low and high level)**.



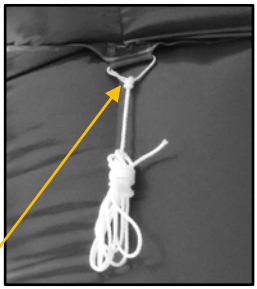

HIGH LEVEL ANCHOR POINTS HAVE A ROPE ATTACHED TO THEM

CAUTION: Only use legitimate anchor points for anchoring purposes like the ones presented above and not any other points that a rope can be tied to like a metal or webbing loop found either the exterior or the interior of the product.

13.2 DRIVING ANCHOR PEGS INTO THE GROUND

Each hammered peg must be able to withstand a pulling force of at least 165kg (1600N). This is why not all types of ground is suitable for anchorage.

Types of ground you may use for anchoring: grass, hard ground.

Types of ground forbidden for anchoring: sand, gravel, previously loosened ground or anything similar that can not hold the required 165kg pulling force.

The low-level anchor point can be used in 2 ways:

a) Pegging to the ground without a rope.



b) Tying them to the peg with a rope.



The ropes of the high-level anchor points should curve gently up to the inflatable so as to allow reasonable movement of the inflatable when in use. The pegs should protrude no more than 25mm above the ground. If the inflatable requires anchorage in the impact area, make sure the pegs are as close in to the base of the inflatable as possible. They should preferably be covered with soft matting of at least 25mm thickness but not more than 125mm, extending at least 1.2m from the open side. Safety mats used indoors should be fire resistant. Whenever it is necessary to have anchor points near to an entrance/exit, they should be connected in such a way as to minimise the danger of tripping, abrasion or other injuries.

The pegs of the high-level anchor points need to be positioned so that the ropes or webbings go upwards at between 30 and 45 degrees. Moving the peg closer to the inflatable makes the angle bigger, moving it away makes the angle smaller.

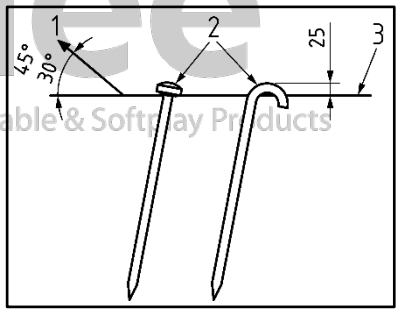

Key:

1. Direction of force
2. Inclined away
3. Ground level

13.3 ANCHOR ROPE KNOT

Each and every high-level anchor point should have a rope tied to it with the following method:

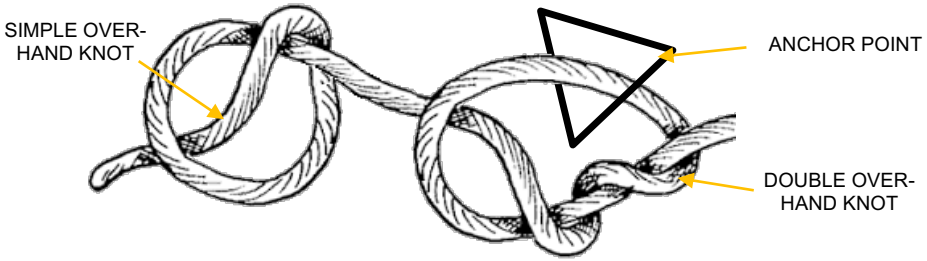

After unpacking, before inflating the unit, please make sure each top anchor rope is properly tied to its anchor point with this method.

Inflatable & Softplay Products

13.4 TEMPORARY ANCHORING AND INFLATION

The windward side of the inflatable will need to be temporarily anchored while it is inflated for the first time; drive anchor pegs into the ground on the windward side and loosely tie on the windward side ropes (usually for the high-level anchor points). Provided your pegs are the industry standard 16mmØ x 38cm long, there should be no chance of driving them into any underground services. However, you should check that there are no obvious signs of excavation for cable runs, pipes etc. Check with your contact/client for the location regarding any underground services before driving the pegs in. If ropes form part of the anchorage system, attach them to the anchor points.

On hard standing, you will be unable to anchor with pegs driven into the ground. Each anchor point must be attached to something which will withstand a force of 164kg. This can be weight or sandbags or any fixed point as long as you are able to demonstrate that it has enough weight and the fixing point is able to take the loading of at least 164kg per anchor point. Any fixing point must be in your full control.

Make sure onlookers keep away. Switch on the fan and allow the inflatable to fully inflate. Watch the temporary anchorages you have connected in case they are positioned wrongly and pull tight. If they do pull tight, quickly switch off the fan and reposition either the inflatable or the peg, or loosen the rope. When the inflatable is fully inflated, you can push or pull it into its correct position using the anchors.

CAUTION: It is highly dangerous to stand or sit on the inflatable during inflation, as it can move suddenly and without warning. Until fully inflated and securely anchored, everyone must stand clear from the inflatable.

13.5 FINAL ADJUSTMENT CHECKS AND PERMANENT ANCHORING

When the inflatable is fully inflated, even a large inflatable can be pulled round by its anchor points (with help) to adjust to its final position. The ropes to the pegs or other means of anchorage should be loosened off before the inflatable is pulled round, and then re-adjusted or re-tied accordingly. Make sure that you have enough help to pull the inflatable round without risk of hurting or straining yourself. The inflatable can be moved while still inflated, however the fan should be moved with the inflatable, or it should be switched off while the inflatable is being moved. If using a petrol fan stop the engine.



When the inflatable is in its final position the anchorage points must be pegged or tied down and then re-checked (if using a steel mallet, eye protection must be worn). You must use every anchorage point on the inflatable their number and positioning has been calculated for each individual inflatable. Drive an anchor peg into the ground for each remaining anchorage point and securely connect any high-level anchor ropes. The temporary anchorages may need to be repositioned.

13.6 CONNECTING MULTIPLE PARTS

If your unit has multiple parts, they must be connected with Velcro flaps. The usual method is with a sandwich Velcro connection. A sandwich Velcro means: 2 hard Velcro flaps surround 1 soft Velcro flap from both sides.

SANDWICH VELCRO ILLUSTRATION:

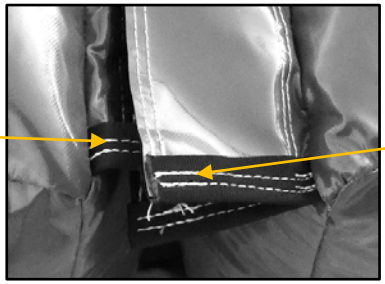

When connecting multiple parts of an obstacle course:

- Connect the bed Velcro flaps in an **uninflated** state.
- Connect the walls and the roof Velcro flaps **after inflation**.

The fan needs to be moved as far away from the inflatable as the blow tube will allow (min 1.2m from a walled side & 2.5m from an open side) and then moved forward 50mm (so as to leave a little slack between fan and inflatable) so that the fan is not pulled when people are bouncing. The inlet pipe must be re-checked to make sure that the inlet pipe is **straight and not twisted.** The fan and its controls should not be accessible to the public, all cables should be routed safely as to avoid contact with the public.

The fan/s can now be turned on, make sure onlookers keep away. Check all around while it is inflating in case the inflatable becomes snagged.

Finally, erect perimeter fences in line with section 8.3 & 8.4. No one should be allowed to use the inflatable before the Routine Inspection (see page 15, section *17. Routine inspection,*) has been carried out and the operator is satisfied that it is safe for public use.

14. CHECK THE WORKING PRESSURE

You can check the pressure is sufficient inside the inflatable by standing on the lowest part of the inflated base (usually the step) with your feet together, making sure that your feet do not touch the ground through the inflatable. You must stand at least 50cm from the edge when the step is 1m or greater. If the step is less than 1m, you must stand in the centre. If you are heavier than the intended user and your feet do not touch the ground, then the pressure is sufficient. If you are lighter than the intended user, get a heavier person's help. If you are using a petrol fan, regulate the speed of the engine so that the pressure inside the inflatable is not too great. An electric fan does not need regulating.

For a more accurate pressure reading you can use a manometer. These divices are commonly available on line and are inexpensive. Wait for the inflatable to be fully inflated and then insert one end of the tube into the inflatable. Follow the manometer manufactuers guidelines on how to obtain and read the pressure. **The minimum pressure should be 1kPa**.

15. USE OF LANDING/CRASH MATS

On hard surfaces you will need landing/crash mats with sufficient impact attenuating properties for a minimum fall off height of 630 mm (according to EN 1177), and a width of 1.2m should be provided to cover the impact area (see page 11, section *15.3 Where is the impact area?* to determine the impact area). Airquee can supply you with safety floor mats. Only fire-resistant safety floor mats should be used indoors.

Particular attention should be given to high sided inflatables such as slides, obstacle courses and air buildings. All high-level anchor points must be utilised and connected to adequate anchorage as described in paragraph 13.4. Extreme care should be taken during erection and deflation especially in windy conditions. Remember we do not recommend operating an inflatable if the wind speed exceeds Force 5 on the Beaufort scale.

16. SETTING UP INDOORS

16.1 IS THE PROPOSED SPACE SUITABLE?

You must check that there is enough floor-space for the inflatable to stand with its filler tube fully extended and there is plenty of space (3.5m) where the users get on and off. The ceiling height must be sufficient to allow the inflatable to inflate fully without touching it. If there is doubt about the height, stand by the fan when inflating so that you are ready to switch off quickly if any part of the inflatable is too tall.

16.2 DOES THE INFLATABLE NEED TO BE ANCHORED?

Much depends upon the size and weight of the inflatable and the size of user. The inflatable will not blow away when indoors, but it could move across the floor and/or it could overturn. An inflatable with a small base and high side-walls is particularly at risk of overturning if there are tall users (and they make a concerted effort to run from side to side throwing themselves against the walls). This type of action on small inflatables will cause the inflatable to move sideways, pulling the fan out of position and threatening to pull the filler-tube off

of the fan. This propensity can be combated by the use of weights tied to the anchor points, or by attaching the anchor points to gym bars or any other secure fittings. Sideways movement can be counteracted by placing rubber mats under the inflatable. Likewise, a rubber mat must also be placed under the fan to keep it still.

16.3 WHERE IS THE IMPACT AREA?

The impact area is the area of ground immediately next to any open side of the inflatable and it extends to 1.2m away. For instance, on a standard castle with 3 walled sides and one open side with a full width step, it is the area shaped like a U, all around the step. Here are a few common examples:

Castle Type | Flat-Bed | Up and Over Slide

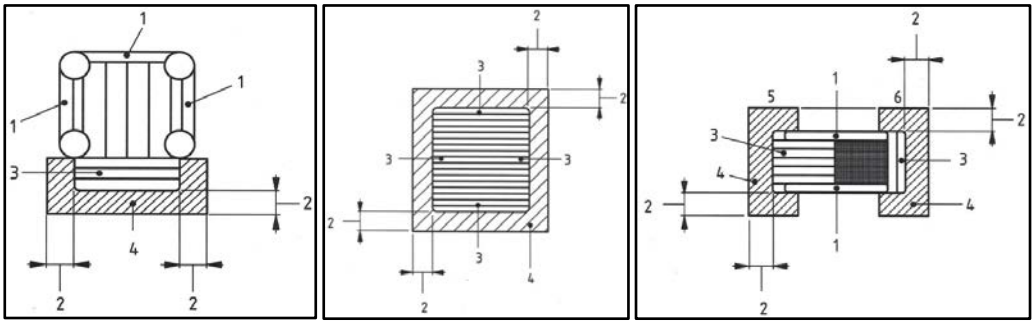

Key:

1. Walled side
2. At least 1.2 metres
3. Open side
4. Impact area
5. Exit
6. Entrance

Airquee®
Inflatable & Softplay Products

16.4 PROTECTING THE BASE

If the hard standing is abrasive you must use a groundsheet under the inflatable to avoid damaging the base.

16.5 KEEP THE FAN STILL AND IN POSITION

A fan running on hard standing tends to move around because of the vibrations. Stand the fan on a rubber mat to prevent this.

16.6 FIRE PRECAUTIONS

Airquee inflatables are made from non-flammable and smoke retardant fabric. In both indoor and outdoor environments there have been no reported cases of an Airquee inflatable catching fire. Nevertheless, owners/controllers are advised to observe fire precautions, especially in indoor environments.

Any indoor area where the inflatable is to be sited must comply fully with any regulatory requirements including fire regulations. A copy of the fire safety instructions should be obtained by the operator, who should pass on details to attendants and users as necessary.

It is the responsibility of the operator to check that these requirements are met. If in doubt, seek advice from the official fire officer for the area. The requirements will usually cover the maximum number of persons allowed in the area at any one time, the available fire exits and escape routes, assembly areas, signage, fire alarms, emergency lighting and sprinkler systems (if applicable) and firefighting equipment such as portable extinguishers.

16.7 ALARMS

As soon as the alarm sounds, get all users off the inflatable in an orderly manner, switch off all fans and lead everyone to a safe assembly area. Check that all users are present. Notify the proper authorities if this has not already been done.

16.8 MEANS OF ESCAPE - EMERGENCY EXITS

Bigger inflatables are equipped with emergency exits. In the case of a sudden air pressure loss, younger users that are in the middle, enclosed section of these units can leave the deflating unit only if the operator/attendant unzips the emergency exit and assists them to step out.

CAUTION: even if the zipper of the emergency exit is equipped with 2 pull tabs, one on each side, **these exits were designed to be operated by adults only**. A younger user won't be able to unzip them, especially if he/she is under stress and the netting starts to wrinkle.

Emergency exits are marked inside:

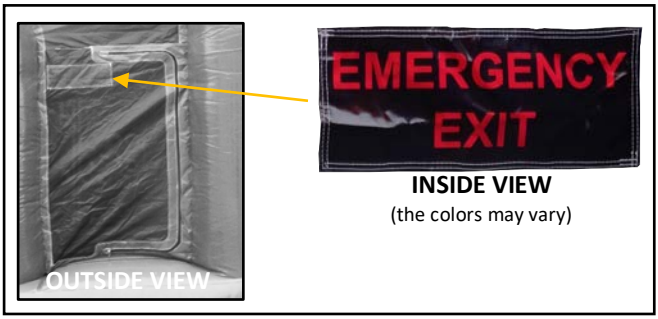

The owner/operator is responsible for ensuring that there is an adequate means of escape from the site/building and proper signage for the safety of all employees and users.

An orderly evacuation to a place of safety is the most important factor in preventing casualties in the event of a fire. Under no circumstances should the attendant waste valuable time and putting lives of others at risk, as well as their own, by attempting to fight the fire, or save the inflatable or any personal possessions.

The attendants must ensure that no part of the inflatable or its ancillary equipment obstructs any escape routes in case of fire. The inflatable should be sited so that its exit(s) correspond(s) with the shortest route to the building's own exits.

Airquee® Inflatable & Softplay Products

16.9 EMERGENCY LIGHTING

All buildings intended for public use are normally required to have emergency lighting as well as fire exits. These emergency lighting systems can fail and should not be relied on as the sole lighting system in the event of a fire. If the mains electrical power supply is interrupted and the buildings emergency lighting (if any) fails or is insufficient, the use of a torch will help to guide users off the inflatable and towards the nearest emergency exit in a calm and orderly manner.

16.10 INDOOR USE

Inflatables are designed with outdoor use in mind apart from some specific inflatables e.g. squash court bouncers and some adult games. Airquee recognises that inflatables may also be used indoors, at the discretion of the operator, and all height restrictions should be adhered to.

The inflatable will usually remain stable indoors under its own weight, but when in use it should be anchored using sufficient weight to stop movement. Sandbags are an excellent way to achieve this. In all cases the operator should consider whether a ground sheet or other protective underlay should be placed under the inflatable to protect the building's floor finishes (as well as the inflatable itself) against scuffing or other damage.

Roofed inflatables indoors: To prevent entrapment of users and avoid panic there must be a flap or device in the fan or air inlet to the inflatable which will act as a non-return valve to prevent sudden deflation (and roof collapse onto users), if the fan stops. The operator must check that this device is fitted and tested. If not, the inflatable should not be used indoors without modification. If the roof of the inflatable is fitted with an eyelet (for this purpose), it should be attached by a rope to an appropriate element of the building itself, e.g. a beam or soffit directly above the inflatable and any slack taken up once the inflatable is fully inflated.

The adult dimension: Users should be aware of the potential danger which can arise when inflatable equipment is used in ways for which it was never designed. Inflatable play equipment for adults is designed with adults in mind. It should not be confused with other inflatable equipment, especially bouncy castles, which are not suitable for use by adults. Strangely enough, adults can be at greater risk of serious injury on inflatables which can carry little or no risk to children (if properly supervised). Airquee strongly recommends that no adults or teenagers are allowed to use the inflatable play equipment intended for children e.g. bouncy castles. If you offer this type of children's play equipment for hire you may be held legally liable if you allow someone to hire your equipment where you ought to have known that it was an event where adults are likely to use it.

Airquee offers a separate range of inflatable play equipment and games for adults so they can have fun and challenge their skills without putting themselves at unnecessary risk. It is worth considering taking steps to limit your legal liability by posting warning notices with suitable disclaimers and getting adult users to sign legal release forms before allowing them onto the inflatable. Different countries may have different laws regarding your legal liability. You should seek independent professional legal advice on this topic.

17. PACKING THE EQUIPMENT AWAY

17.1 PREPARING THE INFLATABLE FOR PACKING AWAY

Before deflating the castle, all users and onlookers must be out of the way. If you have been operating behind a perimeter fence, taking the fence down should be your last job. Now is the best time to clean/remove marks the fabric has sustained. If the castle is wet, dry it off if possible. If drying is not possible, blow the castle up to dry at the first opportunity so that mildew doesn't start to form. When blowing the castle up to dry, not for use, leave a zip or deflation tube half open so that there is a good movement of air to speed up the drying process. Provided it is a dry day, or if you are indoors, this will dry the inside of the inflatable too.

Leave the anchorages connected until the castle is flat but when you remove them do not leave pegs in the ground because a) you will lose them and b) you will trip over them. Take the pegs out and put them somewhere safe before starting to fold and roll the castle.

While the castle is deflating, you can be putting the fan away, rolling up cables, taking up mats and carpet etc. If you have been using a petrol fan, make sure the petrol tap is turned off and the exhaust has cooled down before storing it. If you have noticed any defects in the equipment during the day, make a note of them and give the note to the controller/ operator.

Leave for at least 10 minutes to deflate, longer if is a very large inflatable. Ensure that as much air as possible has escaped before starting to roll and pack the inflatable.

The best shape for the packed inflatable is normally a "Swiss roll" shape with the diameter between a half and a third of the length.

17.2 FOLDING THE INFLATABLE



The most efficient way of packing up is by folding the inflatable in half and walking from the end opposite the air inlet towards the air inlet. Once the majority of the air is expelled and the inflatable is flat on the ground, arrange the walls so they are all folded into the middle and only the base is in contact with the ground.

In section 11.2 you were advised to make a mental note of the width of your inflatable before unrolling commenced, this is to help you to determine the approximate width of your first fold.

Once you have made you first fold check to make sure that all subsequent folds will be of equal width. Depending on the size of your inflatable, your folds could be between 80cm & 150cm wide. All folds should be parallel.

With your first fold completed, shuffle from the furthest end towards the zips or filler pipes. This helps compact the material and expel any remaining air, further folds can now be made. Repeat the process of removing air by shuffling for each fold.




17.3 ROLLING THE INFLATABLE

Start rolling the inflatable as tightly as possible towards the filler pipe using one person to compress as you go. If the inflatable is large then have two or more people roll it, while a third compresses. If at any point the inflatable becomes loose or floppy, unroll it and do it again. When the inflatable is rolled correctly secure it by tying a rope around the roll.









When packed the inflatable can be rolled or tumbled into the van or storage. With big inflatables particularly, never try to lift them up completely. Roll them or tumble them carefully (if down a slope, ensure no person or animal or property is in its path), or use a sack truck or sack barrow or trolley. If you are loading the inflatable into a van then stand it up on its end at the back of the van and lift the end which is on the ground so that the other end acts as a fulcrum and the inflatable can be toppled into the vehicle. Never take personal risks in the course of moving or lifting the inflatable. Ensure enough fit helpers are available. Airquee accepts no responsibility for any injury to persons who take unnecessary risks, especially with their backs.

18. ROUTINE INSPECTION

When everything is set up, before the users are allowed on, the equipment needs to be inspected. Primarily look for any damage which might have happened last time the equipment was used. This is a final check of everything as you should have been mentally checking everything as you set the equipment up. Here are the main items you should now check again:

- Is the site ok? No overhead wires/trees etc.? Plenty of clear space?
- AII of the anchorages are in place and secure?

- Landing/crash mats, if needed, are in position?
- No significant rips or holes in the fabric and seams?
- Internal pressure ok?
- Correct fan?
- Firmly connected to the blow-tube?
- Blow-tube at its furthest extent? The blow tube is not twisted or bent causing an air blockage?
- No exposed electrical parts or wires?
- No damage to switches, plugs, sockets?
- Cables routed out of harm's way?
- Mesh guards intact?
- Petrol cap on? Petrol can in its bund store and hidden from view?

19. OPERATING

IMPORTANT: An inflatable shall not be used without supervision. When it is unattended, it should be deflated and the power supply disabled.

19.1 USEFUL THINGS TO CARRY WITH YOU

- Whistle
- Cash-bag
- Cleaning fluid
- Scissors
- Pliers
- Hammer
- Paper
- Timer
- Cleaning cloths
- Wide, strong sticky-tape
- First aid box
- Screwdriver
- Pen

19.2 PERSONNEL

The controller/operator shall determine the number and suitability of supervisory personnel (min. of one) required to operate the inflatable safely. This should be done by considering matters such as the maximum number of users marked on the inflatable, the age of the users, the environment in which the inflatable is being used. Supervisory personnel is an operator and as many attendants as determined by the controller/operator. Operators and attendants need to be easily identifiable. This is usually achieved by wearing a uniform or part of a uniform which both users and onlookers can recognise. Perhaps a tabard or even a T- shirt with "I'm in charge" emblazoned across it. The operator needs to be able to exercise some authority over the users. For example, a whistle, hung around the operator's neck, immediately confers
authority.

19.3 TRAINING

The controller should ensure that all operators receive effective training in the working of the device including:

- The method of operating the device.
- Safe methods of assembling/dismantling where applicable.
- How to carry out a daily check.

The controller should ensure that all operators and attendants receive effective training in the operation of the device including:

- Safe entry/exit for users.
- Safe anchoring of the inflatable.
- Crowd control measures and barriers.
- Action to be taken in the event of a power failure.
- Procedures for reporting accidents, defects or breakdowns.

Airquee® Inflatable Bouncy Castles

All controllers should have in place a company training manual that includes all of the above, specific company regulations and all relevant requirements of Health and Safety.

The Register of Play Inspectors International (RPII) offer a training award for Supervisors and Attendants of Inflatable Play Equipment and is highly recommended as a good basis for any training. The NAIH have embraced the award as part of their criteria for membership.

19.4 OPERATING GUIDELINES/RULES OF PLAY

Owners or operators should display their rules of play in a manner which can be seen and read by all players before they are allowed onto the inflatable, e.g. a prominent sign-board or poster. The signage is also a useful reminder for staff.

For more details regarding safety signs please consult the relevant national standard/guidance/ legislation in your country of use.

Before entering the game area, clear instructions shall be given to players on their conduct during playtime.

- Always **run a trial** before allowing users on the play area.
- Admit users in a controlled and safe manner.
- If a unit comes with specific **safety inclusions** (helmet, neck brace etc.), it **must be worn**.
- **No one with** any **pre-existing injuries**, **health concerns** (recovering from surgery, limitations), in the state of **pregnancy** or **under the influence of psychotropic substances** may use the unit.
- Do not allow users access to the fans, cables or zips.
- If a product has any exterior platform that a user can stand on, under no circumstances should the user be allowed to climb on it.
- Check the fan, zips, anchor ropes and every other inclusion before, during and after every use.
- Do not allow users to climb or hang on the containing walls.
- The inflatable **to be used with the supplied fans only**.
- Always respect and restrict the maximum number and height of users to the specifications on the label of the unit and the received inspection document.
- **Exercise constant supervision**. Do not leave the product unsupervised in an inflated state. When not in use, deflate it.
- **No food or drinks** permitted on the play area. Players may not have anything in their mouths (gum, candy, etc.) while on the play area.
- Do not allow users to bounce on the step/ramp area.
- Separate users into groups of approximately the same height and age. This is to avoid the more boisterous users coming into contact with the smaller users.
- Get users to remove shoes, necklaces, bags, purses and/or anything hard or sharp.
- Ask spectacle wearers if they can manage without - if not, warn the other users.
- Keep the area surrounding the steps clear of hazardous objects.
- Stop users from playing too roughly.
- Stop users from trying to somersault.
- Close down the operation of the inflatable when refueling a blower or generator running on fuel.

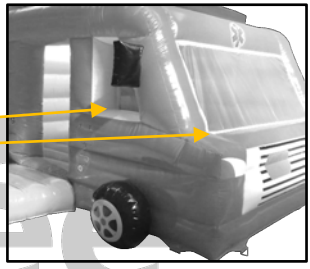

Airquee Inflatable & Softplay Products

19.5 SYSTEM OF WORK

Before the event commences the controller/operator must have decided on a system allowing the use of the inflatable in a safe and controlled manner. The system needs to be adaptable so that it can work smoothly on all occasions. For example, it may be a very busy site with queues of prospective users waiting to go on. It could be an event where the users have to pay for each session or it might be that use of the equipment is free. It is important not to cause discontent amongst both users and onlookers. This can happen if little Johnny only gets 4 minutes bouncing for his pound when little Tracey got 5 minutes for hers. So, a timer is another essential piece of equipment. It needs to be a timer which everyone can see and hear. The system also needs to be able to cope with the users' belongings: The 3.5m in front of the entrance/exit has to be kept clear of the personal items which you do not want on or near the equipment.

If the inflatable includes a ball pond (also sometimes called a ball pool) the attendant should be aware of the following:

Ball Ponds: Children who are unwell or feeling sick or needing to go to the toilet should not be allowed to use the ball pond. Children who are submerged under the balls have been known to panic. They will not suffocate, but are at risk because other users might jump or land on top of them while they are submerged and out of sight. Balls should be evenly distributed so that the depth of the ball pond is constant. Stray balls should be returned to the ball pond. Damaged balls should be removed at once.

Hygiene is of paramount importance where ball ponds are concerned.

19.6 EXAMPLE SYSTEM OF WORK

We are operating a 6m x 6m bouncy castle at a well-attended county show. It is a beautiful day and there are crowds so we erected the perimeter fence before erecting the castle. It is an event at which we are charging the users £1 for a 5 minute session. There is one operator and one attendant. The operator has a whistle and a kitchen timer with a bell. The attendant has a cash bag. They are dressed alike so that they are identifiable. There is a piece of rope or webbing attached to one side of the 1m wide gateway which can be used to close it. On the ground inside the fence there is a piece of carpet, canvas, PVC or the like. Attached to one side of the gateway there is a perpendicular pole on which is marked the maximum height of user, and we know (from the manual or the user information written on the castle) the maximum height and number of users on the equipment at once. The castle is up, properly anchored, and we have done our routine inspection. The fan is full of petrol and we have placed our spare can in its bund store and hidden it, so let's start. This system of work can be adapted to suit other conditions and different items of equipment. For instance, if it is an obstacle course we are operating where the users start at one end and finish at the other, we may need an entrance at one end of our compound and an exit at the other plus another attendant to make sure that those who have finished go out. When operating a large slide, the entrance and exit might be opposite each other at one end of our compound with an attendant on each, and the operator might be on the platform at the top of the slide. A system of wristbands is often used when the charge is, say, £1 for 3 slides.

19.7 ATTENDANT'S DUTIES

Standing so as to block the gate, the attendant surveys the queue to see if there are users of approximately the same height, up to the maximum user height allowed for the inflatable. Siblings are usually ok to go on together, even if they are of differing heights. The attendant looks each user over before taking their money and tells them to take off their shoes, perhaps a necklace, glasses (where practicable) or bag, take out gum, remove hard, sharp or dangerous objects and food/ drinks from their person and leave outside the fence. Then they pay and are instructed to come through the gate and stand still or sit still on the carpet. When this has been done 10 times, the attendant closes the gate and the operator takes charge of the next group of users. The attendant then turns to the queue again, mentally sorting out who is going on in the next session. It is important not to make a particular person or group of persons wait too long out of turn. If there a number of larger children who have waited for the previous group of smaller users, it is good policy to take only those on the next session. The attendant is seen to be fair as well as safety-minded. The 5-minute session being now well under way, the attendant opens the gate, gets the next group onto the carpet and closes the gate. Now the attendant can keep the waiting group under control so that the operator can concentrate on the group which is bouncing.

19.8 OPERATOR'S DUTIES

The operator does not need to worry about numbers, heights, payment etc. as the attendant is taking care of all of that preparation work. He/she needs to address the 10 users waiting on the carpet, tell them what they can and cannot do whilst on the castle, that they must stop playing and stand still when they hear the whistle and that they must be careful of the other users so that no-one gets hurt. If this little talk is given in a kindly but authoritative manner, users up to about 12 or 13 years take it to heart. So, they've had their little instructional talk. Now to get them on safely. There is space across the front of a 6m castle for 3 users to mount simultaneously. The operator instructs them to line up in threes, stands at the front of the castle and then tells the first three to mount, using and accentuating the word "carefully". Some users may need help getting on. Then the next 3 and so on. This all takes about half a minute. The timer should now be set. The onlookers, especially, like to see the timer set when all the users are on and not before.

Airquee® Bouncy Castle & Soft Play Products

The operator now constantly watches the activity on the castle, blowing the whistle at any sign of misbehaviour or excessive boisterousness. If a particular user is spoiling the play of the others by being inconsiderate, the operator should blow the whistle, tell the offender to get off and instruct the attendant to refund their money. After what seems like an hour, the timer bell goes off. The users and onlookers all hear it and are expecting the whistle to blow. The operator turns to the group waiting on the carpet and tells them to sit (or stand) still while the first group is getting off. Only then does the operator turn to the castle, blow the whistle, shout "stand still" and, pointing at the nearest, instruct them to get off "carefully". The attendant opens the gate, shepherds the group out and closes it again.

The controller/operator shall keep available documentation relating to the safety of the equipment. These shall include:

- Operation manual (in an electronic format)
- Certificate of inspection and testing (in an electronic format)
- Records of inspection
- Records of maintenance
- Records of alteration
- Accident reports

19.9 TAKE A BREAK

After a couple of hours, it is policy to close the castle for 5 minutes to:

- Take a breather
- Top up the petrol in the fan
- Check that the anchorage is still secure.
- Empty money out of the cash-bag which is growing heavy
- Check that everything else is still good - anchorages, fence, etc...

19.10 EMERGENCIES

In the event of a power failure which causes the fan to stop, the operator will notice that the inflatable gets soft. At this point, the operator blows the whistle and shouts "stand still". The attendant closes the gate. When the users are still and attentive, the operator steps onto the castle and assists each user in turn to get off. The attendant stands by the front of the castle, hands off the users onto the ground and gets them to sit or stand still in a group. If the castle has a superstructure it will slowly descend. The operator supports it so that the users can pass underneath safely. Having evacuated all of the users, the operator goes to investigate the problem while the attendant looks after both groups of users. If there is no immediately apparent solution to the problem, each user is refunded and sent out of the compound. If there is a quick solution such as a re-fill of petrol or reconnecting a plug, the operator deals with it, the castle inflates again and the session can resume.

In the event of a storm or squall blowing up where the wind feels too strong, stop the session there and then and refund payments. Get the castle deflated as quickly as possible. Resume when the bad weather has passed. Use of the castle in light rain or drizzle is possible if the castle is fitted with a rain-cover which keeps the bouncing surface dry. However, if the bouncing surface gets wet, stop the session as slipping and sliding users can injure themselves and others.

In the event of an injury to a user on the castle, the operator blows the whistle and shouts "stand still". The attendant closes the gate and takes charge of the waiting users. The operator gets onto the castle and investigates the injury. It is usually a minor injury such as a bruise and the user just needs a little sympathy and reassurance after which the session can continue. It could be that the injured user wants to get off and recuperate in which case he/she can join the next suitable session free of charge.

If the injury is more serious, the operator stays with the injured user while the attendant evacuates the other users "quietly and carefully", finds the injured user's relative/parent/friend in the crowd and sends someone off to get the St. John's Ambulance or similar. After the injured user has been treated / removed, the operator makes written notes of the time of the accident, what happened, the size and number of users on the castle at the time, the type of injury and any other relevant information. This may be needed if the injury is serious enough to warrant the controller/operator reporting the accident to the authorities (see RIDDOR booklet).

Airquee® Inflatable & Softplay Products

19.11 CLEANING & HYGIENE

It is vital that children's play equipment should be cleaned thoroughly at regular intervals and that the highest standards of hygiene are maintained.

You should clean the PVC surface as necessary with a **non-corrosive antibacterial** cleaning solution. Taken into account the ongoing worldwide epidemic, you may use **anti-viral solutions** as well. Care should be taken when cleaning applied artwork as the paint may be damaged if rubbed hard or if chemically aggressive cleaning agents are used on painted areas. You should take into account the requirements of the Control of Substances Hazardous to Health Regulations 1994 ("COSSH") when selecting cleaning agents, for risks to users and employees.

An **anti-static silicone polish** can also be applied when the PVC surface is clean. This should be applied to **slides only**, to maintain a slippery surface, but **not to places where a firm footing is desirable**, e.g. platforms, climbers, entrances and exits.

Vacuuming will remove dust and litter from the recesses, seams and corners of the inflatable.

Spills involving bodily fluids/waste should ONLY be cleaned by a first aider trained in cross-contamination techniques.

20. MAINTENANCE, SERVICE AND INSPECTION PROCEDURES

20.1 DAILY INSPECTION SCHEDULE

Checks should always be carried out before the first use every day following the advice given by the manufacturer in the operations manual and in section 7.1.1 of EN 14960-1:2019. These should include checking the following:

- The site remains suitable, with crowd control measures in place if appropriate.
- Anchorages are intact, protected where necessary and ropes not worn or chafed.
- Anchor system secures the inflatable device to the ground.
- There are no significant rips or holes in the fabric or seams.
- The correct fan specified for the device is being used and the air pressure is sufficient to give a reliable firm footing.
- There are no exposed electrical contacts, there is no wear on electrical cables and plugs, and no damage to sockets and switches.
- If an internal combustion engine is used, ensure the fuel cap is placed firmly on the fuel tank and any reserve fuel tank is suitable and remains in a safe position.
- Bolts and screws of the fan are properly secured and that robust guards are secured over the air inlet and outlet.
- The fan connection tube is in good condition and is firmly fixed to the blower.
- The fan is positioned correctly, adequately protected or guarded and is not causing a tripping hazard.

20.2 ANNUAL INSPECTION

An annual safety inspection is a UK requirement under the Provision and Use of Work Equipment Regulations 1998 (PUWER). Airquee can carry this out at its factory or by one of its mobile inspectors. A certificate will be issued confirming the result of the safety inspection and test. If repair or replacement should be deemed necessary you will be advised accordingly.

If you wish to use your own inspector, Airquee strongly recommends that you use the services of a Register of Play Inspectors International (RPII) or the PIPA scheme for your annual test in order to meet your responsibilities.

21. RUNNING REPAIRS

Please check with us before undertaking any major repairs, as this may affect your warranty.

Airquee® Inflatable & Softplay Products

22. WARRANTY - WHAT IT COVERS

Airquee has the option to repair the inflatable, replace it with a new inflatable free of charge, or refund the price paid for it. The owner/controller must return it to Airquee for inspection and the choice of repair, replacement or refund is entirely at Airquee's discretion. Wear and tear or damage resulting from neglect, abuse or failure to comply with Airquee's instructions is excluded. Modifications or unapproved repairs will void the warranty. For the full details of the warranty please read the *Airquee Standard Conditions of Sale and Warranty* at http://airquee.com/terms, a copy of which is available on request.

Fans are sold with the third-party manufacturers own warranty and not covered by the Airquee warranty!

23. DISPOSAL

Airquee recommends that inflatables should be replaced after the third season in any event, even though they may still be useable. The economic life depends on the degree and frequency of actual usage and Airquee does not warrant that the inflatable will last up to 3 years, although inflatables can and sometimes do last longer.

In no circumstances should the inflatable be disposed by burning as the PVC coated fabric will give off toxic smoke and gases during combustion. In many areas of the UK such smoke will contravene the Clean Air Acts and burning the inflatable will be an offence. The local authority should be contacted for advice regarding the best means of disposal in your area.

24. SLIDES

The minimum number of operating personnel for an inflatable slide is 1. Standing at the bottom of the slide, granting access to the inflatable and instructing players to step away from the run-out.

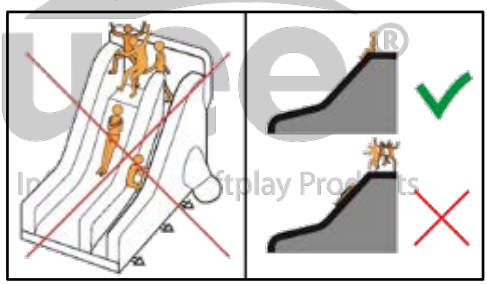

- Always adhere to the stated number of users and **do not allow the slide to become overcrowded**.
- **No rough play**! Boisterous behavior (for example, deliberately pushing others off the inflatable or lifting the inflatable in an attempt to dislodge others) which might put themselves or others at risk is to be curbed. Offenders should be warned in the first instance.
- The correct sliding position**:**
  - **Arms crossed** at front. Users to slide down the center of the slide in order to avoid touching the walls.
  - **Slide feet first only** - the operator **must not allow users to go down head first** as this can cause serious injury.

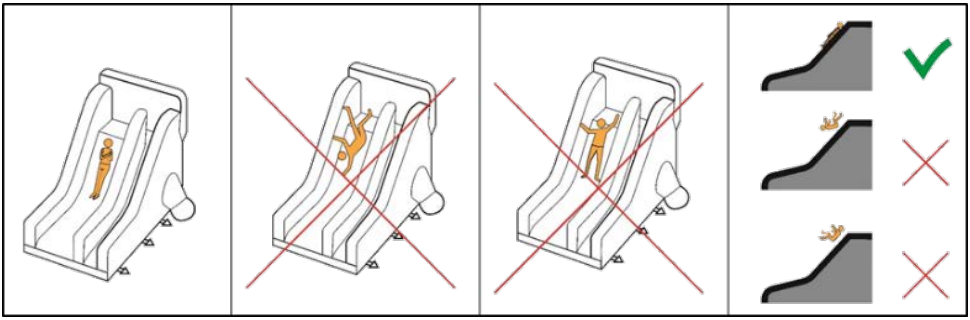

Supervisors must instruct users regarding the correct sliding position. Clearly visible signage of the correct sliding position is advised.

- **Full clothing** must be worn when sliding. Avoid exposed skin, as skin abrasion can occur.

We recommend to have spare long sleeve clothing and leggings to hand out to users.

- **No jumping**, sit to launch.

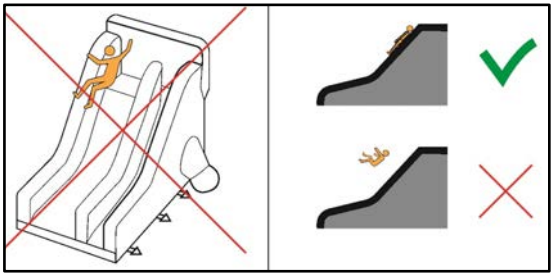

- **One person** to slide at a time per lane.

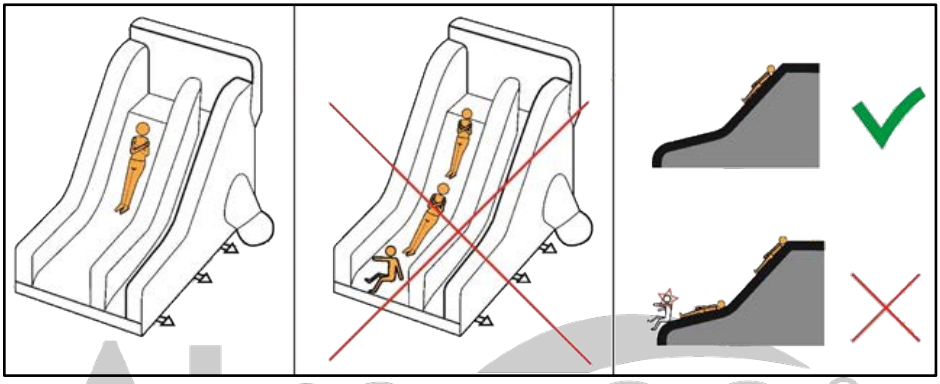

- Only allow the next user to slide if the previous user has already left the run-out area (marked in red).

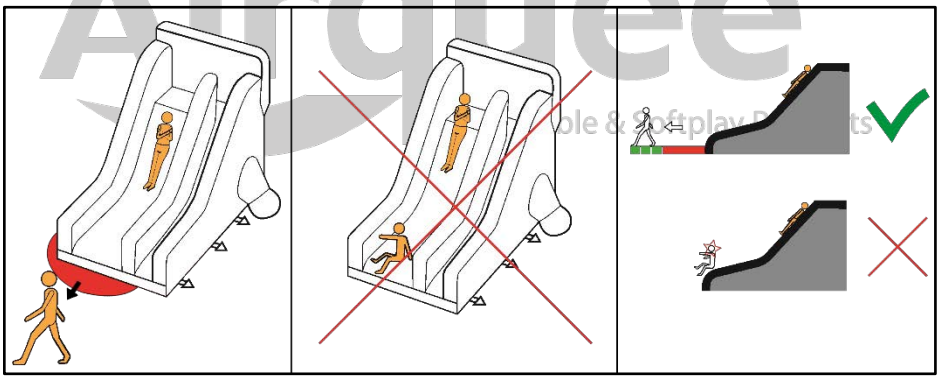

- If your slide has multiple lanes and **without** a separating wall, please make sure to slide in a straight path, without intersecting other users' sliding path.

- No sliding in the lap of others.
(This rule is mostly for parents.)

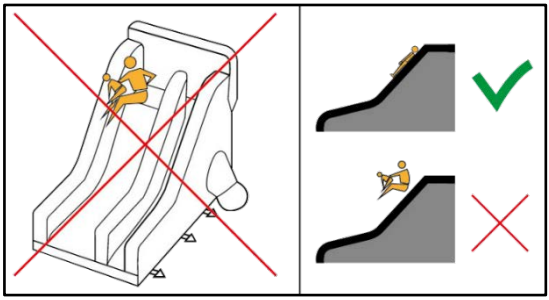

Airquee®

25. OBSTACLE COURSES

The purpose of an obstacle course is to overcome its challenges and difficulties as quickly as possible. Usually competing against another user or part of a larger race.

There are 2 ways to use the obstacle course:

Race mode

Players race each other through the unit, using a staggered start. 2 players start the course, and when they got half way another 2 may start (this depends on the speed of the players too).



Play mode

The obstacle course is used as a normal bouncy castle/inflatable slide. In this mode the number of users is significantly higher.



SUPERVISION OF OBSTACLE COURSES

When operating in race mode: the attendant stands at the entrance of the inflatable and the operator at half way of the course. As soon as the 2 competing players have passed the half way of the unit (the position of the operator), the operator signals to the attendant, which than allows another 2 players to start the race.

26. "DISCO READY" FEATURE

If your inflatable has "Disco Ready" features, this means it has a Light Pocket on the ceiling, a Speaker Holding Platform and an already installed Electrical Wiring.

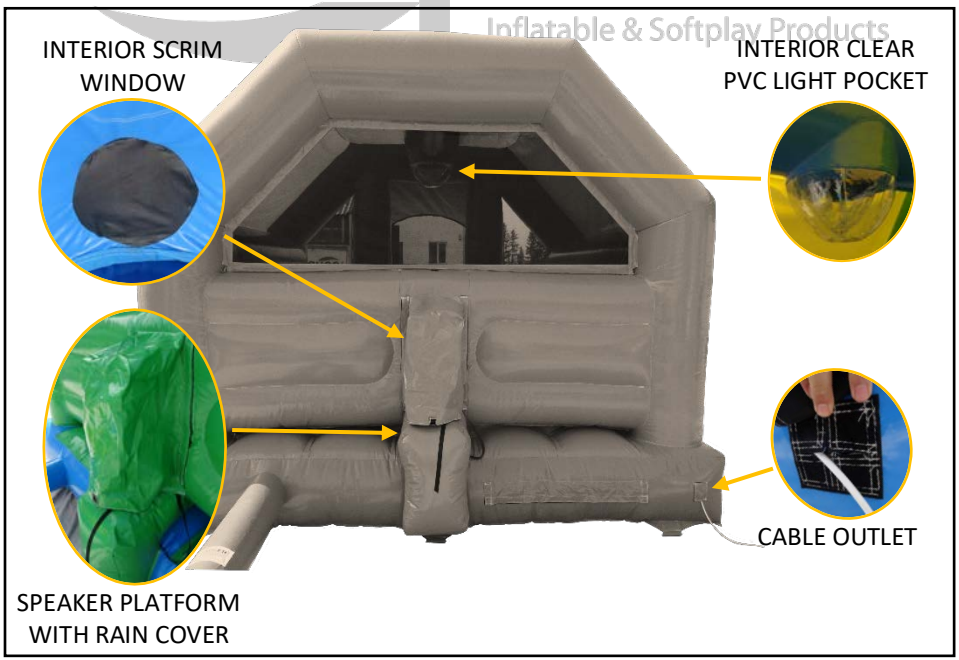

Airquee® Inflatable & Softplay Products

All cables and electrical equipment must be tested in accordance with the regulations of your country. According to British HSE guidelines, all 240v equipment should be protected with an RCD having a maximum trip current of at least 30 mA.

LIGHTS

The disco lights to be installed **before inflation**. Always read the instruction manual you receive with your lights before installing it into the unit.

SPEAKER

The disco speaker to be attached **after inflation**. Secure it with the two webbing cam buckle straps.



WARNING: High Noise Hazard: Extended exposure to very high-volume sound can cause serious damage to hearing. Exercise caution when setting the volume and remember that inside the unit the sound is enclosed and much louder.

- The electrical items that you choose to use in your inflatable must meet the safety standards of the country you are operating in. You must ensure that all items are **CE marked.**
- The electrical wiring used within the unit is **not water proof nor water resistant**. When inflated, the air pressure will prevent ingress of water into the unit but it cannot be guaranteed to stop all water reaching the electrical parts. If you suspect water has entered any of the electrical components they should not be used until completely dry and tested. We recommend taking professional advice where necessary.
- When packing away, leave the wiring harness in the inflatable.
- The disco speaker will be unplugged and taken out **before deflating the unit**.
- The disco light will be taken out **after the unit is deflated**.
- Use a light with a **low heat output** to not to melt/damage the clear PVC pocket.
- In case of a short circuit the materials used in the manufacturing of the inflatable are flame retardant, thus preventing the spread of flames.
- The lights and speakers to be only used with an RCD.

27. RISK ASSESSMENT

The risk assessment below only presents a general context of the possible problems and dangers that may arise when operating an inflatable product. It is still your legal duty to prepare your own risk assessment adjusted to your circumstances and needs, and to train your staff on every aspect of your assessment.

THIS RISK ASSESSMENT ONLY PRESENTS A GENERAL CONTEXT OF POSSIBLE RISKS INHERENT IN OPERATING AN INFLATABLE PRODUCT. IT SHOULD BE INTEGRATED INTO YOUR MORE COMPREHENSIVE RISK ASSESSMENT WHICH IS YOUR LEGAL DUTY TO PREPARE AND UPDATE REGULARLY ADJUSTED TO YOUR OWN SPECIFIC CIRCUMSTANCES!

EQUIPMENT: INFLATABLE PLAY EQUIPMENT PERSON AT RISK: USERS AND STAFF		GENERAL OPERATIONAL RISK ASSESSMENT	
HAZARDS	**POSSIBLE CAUSES**	**RISK CONTROL MEASURES**	**NOTES**
Manual Handling		**General Guidelines:** - Always have sufficient number of workers. - Professional Manual Handling and Heavy Lifting training recommended for all employees handling the inflatables. - Comprehensive Insurance Policy to be taken prior to the event. (e.g. employer's liability insurance)	
- Injuries while transporting, moving, setting up, packing away and storing the inflatable.	- Inappropriate or lack of manual handling training. - Moving the inflatable without using a trolley. - Lack of proper lifting equipment (forklift, hoist, crane etc.) - Using lifting machinery by unqualified personnel. - Hasty assembling can lead to accidents. - Those banging in the stakes (pegs) could hit their hands.	- Always have sufficient number of workers when moving, setting up or packing away the inflatable. - A trolley can be used to move and transport the inflatable and fans. Lifting devices as a forklift, crane or hoist can be used and must be operated only by a qualified person. - Hold the stakes halfway down when banging them. - Knock the stakes sideways using the mallet before trying to pull them out.	- We recommend a detailed Heavy Lifting and/or Manual Handling training for your employees. It could prevent an accident from happening and/or protect the employer in case of a personal injury claim by one of the employees. - Leave sufficient time for setting up and testing the inflatable. Do not hurry.
Fire/Electricity		**General Guidelines:** - A permit to work system to be implemented in the day to day operation of the inflatable. - Comprehensive Insurance Policy to be taken prior the event. - Regular (yearly) PAT testing for fixed and portable electrical equipment.	
- Electrocution.	- Poorly maintained or improper use of fan(s)/ generator(s). - Incorrectly rated fuses or circuit breakers, overloaded electrical sockets. - Ineffective smoking policy, incorrect storage of ignition sources. - Ineffective crowd control measures. - Poor cable management.	- Regular inspections and maintenance performed on fans and generators by a qualified person. - Do not use electrical appliances unless they are PAT tested. - Do not allow users and spectators access to fans, generators or cables. Cables can be taped down to the floor or a suitable cable management system can be used. Fans and generators must be cordoned off or hidden with fan cover boxes. - RCD-s must be used especially when the inflatable is operated in an outdoor environment. - A test-run without any users usually identifies a faulty equipment. - The inflatable shall not be made available to the public until any adjustments or repairs on its fans that were judged to be necessary have been completed.	- A residual-current device (RCD) or residual-current circuit breaker (RCCB) is a device that quickly breaks an electrical circuit to prevent serious harm from an ongoing electric shock. RCD is the name used in the United Kingdom. In the United States and Canada, the terms ground fault circuit interrupter (GFCI), ground fault interrupter (GFI) or appliance leakage current interrupter (ALCI), also known as a leakage current detection interrupter (LCDI) are used.
- Fire or explosion when using petrol blowers/generators.	- Poorly maintained or improper use of fan(s)/generator. - Improper fencing/cordoning off the generator/blower.	- Safety fencing erected around blower/generator. - Blowers/generators filled with fuel before delivery. - Suitable fire extinguisher at hand, hold in a place easy to access. - A test-run without any users usually identifies a faulty equipment. - Fans and generators to be switched off during re-fuelling. - No Smoking policy in place for all areas where the inflatable is operated. - All spare fuel is stored in suitable marked container, and in a safe location.	- Petrol fans and generators should be cleaned and maintained according to the manufacturer's guidelines by a qualified person. - The inflatable is made of fire retardant materials.
Anchoring		**General Guidelines:** - Never use the inflatable in an outdoor environment unanchored. Not even when testing it or exhibited.	
- Inflatable turned over, lifted or blown away.	- Damaged pegs, ropes, anchor points. - Rope not tied properly with a loose knot. - Unused anchor points.	- Always check the anchoring system (anchor points, pegs, ropes etc.) for damages before and after each play session. - Only use hard grounds. No sand, gravel, mud or similarly loose surfaces can be used. Not even grass loosed by rain is acceptable. Never use a previously loosened ground for anchoring (e. g. construction sites, molehills). - Follow the anchoring procedure in the Operation Manual. - All anchor points (both high and low level) must be used.	- Even if the inflatable is properly anchored, in the case of a serious storm, with a very high speed of wind, the anchorage system could fail.

HAZARDS	POSSIBLE CAUSES	RISK CONTROL MEASURES	NOTES
Supervision Related Injuries (the hazards below usually have a common cause which is poor supervision)		**General Guidelines:** **- Please note even if properly supervised, users may still injure themselves because of the nature of the activity.** - Comprehensive insurance policy to be taken prior operating the inflatable. (e.g. public liability insurance) - Training recommended for all supervising personnel. - Proper detailed "Rules of Play" signage to be placed at a visible place. - Never leave the inflatable unsupervised while inflated. - Supervisors must have an attitude of authority. - Supervisors should position themselves to have a good overall view on every user on the play area.	
- Getting chocked from food, drinks, gum or similar.	- Users have something in their mouth when accessing the inflatable. - Users are allowed to bring food and/or drinks on the play area.	- If in doubt, investigate the mouth cavity of users before allowing them on the play area. - Clear verbal instructions to be given to each entering user about no food or gum policy on the play area.	
- Users collide while bouncing.	- Overcrowding. - Not allowing enough time for users to leave the play area. - Mixing users of different ages, size and weight. Larger users colliding with smaller participants. - Users not respecting the instructions of the supervisors. - Not sufficient instructions given to users prior entering the play area. - Overenthusiastic users (rough play).	- Clear instructions given to users about rules of play before entering the play area. Using signs illustrating the rules of play. - Play should be halted and users who do not listen to the supervisor's instructions removed from the play area immediately. - Wait for a user to leave the play area before allowing a new one to enter. - Participants put in to groups of similar size and age.	- The number and height of users is stated on the label of the inflatable, in the email with the link with the finished pictures and the supplied IT (initial test) certificate.
- Injuries from sliding: friction burns, collision, bouncing on the slide platform.	- Incorrect sliding position. - Run-out still occupied by previous user. - Maximum user number not respected. - Clothing not adequate. - Insufficient number of supervisors. - Users bouncing/playing on the slide platform. - Slide sheet cover not added to the slide(s). Incorrect set-up.	- Proper training of supervising personnel in the correct sliding position and safe sliding conditions. - Allocate a sufficient number of supervisors on every slide of the inflatable. - Always respect the maximum number of users. - Users to have full body clothing.	- Please read "Annex 1: Slides" in the Operation Manual for all aspects on how to operate an inflatable slide safely.
- Injuries from entering/exiting the play area: entering users colliding with exiting users.	- Entering/exiting in a non-safe manner, sometimes from a non-designated part of the inflatable (e.g. emergency exits, walls). - Poor supervision. - Ineffective crowd control measures. - Users not respecting the instructions of the supervisors. - Incorrect entry/exit signage. - No safety crash mats at the entrance/exit.	- Using fences or cordon ropes for better crowd control. - The use of entry/exit signs. - Increasing the number of supervisors. - Play should be halted and users who do not listen to the supervisor's instructions removed from the play area immediately. - Do not allow users to jump from the entrance/exit steps. - Use crash mats at the entrance/exit.	- Proper training for supervising personnel. - Using a whistle and an easily identifiable uniform may give more authority to supervisors. - In the event of large numbers participants are controlled on and off of the castle in timed groups.
- Collisions with queuing participants.	- Ineffective crowd control measures (fences, cordons) Users waiting to go on the inflatable are not queuing at the designated area.	- Queue point at least 2m away from the inflatable. Supervising staff must ensure users do not get too close and queue in the correct area. - A separate supervisor to control the queuing of users.	
- Dangerous use of the inflatable.	- Using the inflatable in a way it wasn't intended by the manufacturer. - Not sufficient instructions given to users before entering the play area. - The lack of rules of play signage. - Users not respecting the instructions of the supervising personnel.	- Clear instructions given to users about rules of play before entering the play area. Using signs illustrating the rules of play. - Users should only stand at their designated play area (the podiums, numbers, jumping platform or similar). - Play should be halted and users who do not listen to the supervisors' instructions removed from the play area immediately.	- When operated safely and when the control measures are vigilantly followed, risk of injury to participants is massively reduced. **- Climbing, hanging or sitting on walls is dangerous** and must not be allowed at any time. - Supervisors should pay special attention to users standing on slide platforms.
Accidents		**General Guidelines:** - In the event that someone is seriously injured, **do not move** the individual, **leave the fans switched on** and dial 999 (UK) or 112 (EU) immediately. - Comprehensive insurance policy to be taken prior operating the inflatable. (e.g. public liability insurance) - First aid/emergency training is advised for all supervising personnel. If first aid-ers fulfill what legally is called "duty of care", it may protect the employer against an injury claim. **- No one under the influence of psychotropic substances or presenting any sign of intoxication may be allowed on the play areas.**	
- Injuries while bouncing. - Recurrent injuries.	- Bouncing requires a high level of fitness. Anyone could injure himself/herself accidentally by overstretching his/her physical abilities. - Larger participants colliding with smaller participants. - Acrobatics in the ball pond.	- Ensure that no one with a history of back or neck problems or who suffers from a heart complaint uses the Inflatable or anyone who is feeling unwell. Pregnant women may not use any equipment at anytime. - No Acrobatics or somersaults allowed, especially in the ball pond. - Allow users to limber up before entering the play area (especially older users).	- A good limber up before entering the play area prepares the vital parts of the body (joints, tendons, heart etc.) for the intense physical effort that is coupled with bouncing and may lower the risk of injuries.

HAZARDS	POSSIBLE CAUSES	RISK CONTROL MEASURES	NOTES
- Users injured by personal objects.	- Sharp, pointy objects not removed prior to stepping on the play area. - Inappropriate clothing.	- "Rules of play" signage to include "Remove all necklaces, glasses, watches, gum, mobiles..." and "No food, no shoes" (or similar).	If doubts arise, supervising personnel may check the pockets of users before allowing them on the play area.
- Injury from impact with hard surfaces.	- If your inflatable has open walls, allowing users to stand and/or jump through the walls. - Allowing users on the inflatable without being totally inflated. - Not using crashmats on open sides.	- Do not allow users to stand on the walls, or try to leave the inflatable through it. - Never allow users on the play area until it is totally inflated and the correct pressure is measured inside the inflated bed. - Use crashmats on every open side of the inflatable.	- For measuring the inside pressure of the bed please use a certified measuring tool. The pressure should always be above 4 WGP. - See section 17.4 of the supplied Operation Manual for information about an open side of the inflatables and using crash mats.
- Instability of the inflatable from pressure drops.	- Not using all the supplied fans. - Fan(s) not connected correctly. - Power cut. - Damaged panels (broke stitching, cut pvc panels) - Zips not closed properly. - A member(s) of the public turning off or unplugging the fan(s). pulling zips wide open.	- Ensure all fans are attached properly. - Continual checking of power supply. - Before every inflation make sure every zip is closed properly. - Small damages can be fixed with the supplied repair kit. - Do not allow the members of the public access to the zips/fans/cables. - Stormy weather (lightning) can damage the electric network.	- Stop the event if pressure visibly decreases. Only allow users back on the inflatable if the problem has been remediated.
- Injury from incorrect positioning of the inflatable.	- The final positioning of the inflatable is not on a totally flat area. The inclination of the bed shouldn't be more than 5°.	- The inflatable to be set up on a levelled surface only.	- For this purpose, you may use a water level ruler.
- Collision with fans.	- The fan is positioned to close to the inflatable. - The fan is not hidden or cordoned off properly.	- Fan(s) cordoned off with fencing / barriers stopping participants walking/bumping into the fan. If available use fan protection covers/boxes. - Move the fans as far as possible, so the filler pipe forms a 90° angle.	
- Stepping/tripping on anchor pegs.	- Pegs not covered properly.	- Use anchor protection products at exposed hazardous anchor points.	
- Friction burns. (mostly from sliding).	- Users not wearing proper cloths. - Slide cover is missing. Incorrect set-up of the inflatable.	- Only allow users with proper clothing on the play area. - Do not use the inflatable without all the supplied cover sheets (slide sheet, steps, etc.).	- Slide covers are made of a material with lesser adhesion. This is why the inflatable should never be used without the supplied slide sheets.
- Rapidly changing weather conditions (high gusts of wind, rain and lightning).	- Inefficient weather prognosis. - Unpredictable weather.	- Constantly monitor the weather with certified tools (e.g. barometer, anemometer etc.) for any changes. - If you observe a sudden change in weather conditions: you must halt play, deflate the inflatable, disconnect it from its power source.	- Always check the weather prognosis from multiple sources before setting up the inflatable in an outdoor environment. - As stated in the operation manual: "The maximum wind speed should not exceed Force 5 (which is 28-38 kmh or 19-24 mph) on Beaufort scale " and do not use the inflatable in the rain.
Hygiene		**General Guidelines:** - Maintain a general clean condition of the inflatable. Use adequate cleaning products. - Always check for mildew forming inside the inflated chambers. - Always pack and store the inflatable in a dry and clean condition.	
- Users contaminated with mildew, bacteria or any hazardous substance.	- Dirty surfaces of the inflatable. - Superficial cleaning process. - Dirty or contaminated fans.	- Clean the inflatable after every use. - Make sure the fan is blowing clean, odourless air. - Dry the inflatable if necessary before packing it away by leaving the fan on for an extra period of time.	- The inflatable can be cleaned with water. - Care should be taken when cleaning artwork (especially when wet) as the paint may be damaged if rubbed hard or if chemically aggressive cleaning agents are used on painted areas. First apply on a small test area of fabric and/or artwork preferably one, which will not be noticeable during normal use.

Airflo® Softplay Products

LOG BOOK

1. Product identification 31
2. Technical details 31
3. Manufacturers details 31
4. Owner/managers details.....32
5. Inspection record 33
6. Accident log 36

1. PRODUCT IDENTIFICATION

Type of Product	
Location of Product	
Contact Person	
Serial Number	
Year of Manufacture	

2. TECHNICAL DETAILS

Measurements	Length
	Width
	Height
No. of Anchor Points	
Material Type & Weight	

3. MANUFACTURER DETAILS

Name:	Airquee Limited
Address:	Duel House, Llandowlais Street, Cwmbran, NP44 7XB, UK
Phone Number:	+44(0)1179 414 918

Airquee® Inflatable & Softplay Products

4. OWNER / MANAGER DETAILS

Details of owner should be completed at the point of sale and details kept by the supplier. All training manuals and inspection certificates should be transferred to the new owner with the inflatable. This will be a valuable asset when applying for insurance or in case of an investigation.

FIRST OWNER

Name of Owner	
Address	
Post Code	
Phone Number	
Transfer Date	

SECOND OWNER

Name of Owner	
Address	
Post Code	
Phone Number	
Transfer Date	

Airquee®
Inflatable & Softplay Products

THIRD OWNER

Name of Owner	
Address	
Post Code	
Phone Number	
Transfer Date	

5. INSPECTION RECORD

INITIAL INSPECTION

Inspection Date	As Per Your Initial Test Certificate
Name of Inspection Service	Airquee Ltd.
Address	Duel House, Llandowlais Street, Cwmbran
Post Code	NP44 7XB, UK
Phone Number	+44 (0) 1179 414 918
Name of RPII Inspector	
PIPA Inspection Report Number	
Remarks/recommendations (Including maximum user height and maximum numbers)	

Airquee® Inflatable & Softplay Products

FIRST RE-INSPECTION

Inspection Date	
Name of Inspection Service	
Address	
Post Code	
Phone Number	
Inspector Name	
Inspection Report Number	
Remarks/recommendations (Including maximum user height and maximum numbers)	

5. INSPECTION RECORD

SECOND RE-INSPECTION

Inspection Date	
Name of Inspection Service	
Address	
Post Code	
Phone Number	
Inspector Name	
Inspection Report Number	
Remarks/recommendations (Including maximum user height and maximum numbers)	

THIRD RE-INSPECTION

Inspection Date	
Name of Inspection Service	
Address	
Post Code	
Phone Number	
Inspector Name	
Inspection Report Number	
Remarks/recommendations (Including maximum user height and maximum numbers)	

Airquee® Inflatable & Softplay Products

5. INSPECTION RECORD

FOURTH RE-INSPECTION

Inspection Date	
Name of Inspection Service	
Address	
Post Code	
Phone Number	
Inspector Name	
Inspection Report Number	
Remarks/recommendations (Including maximum user height and maximum numbers)	

FIFTH RE-INSPECTION

Inspection Date	
Name of Inspection Service	
Address	
Post Code	
Phone Number	
Inspector Name	
Inspection Report Number	
Remarks/recommendations Including maximum user height and maximum numbers)	

Additional inspections should be added on a separate sheet.

Airquee® Inflatable & Softplay Products

SIXTH RE-INSPECTION

Inspection Date	
Name of Inspection Service	
Address	
Post Code	
Phone Number	
Inspector Name	
Inspection Report Number	
Remarks/recommendations (Including maximum user height and maximum numbers)	

SEVENTH RE-INSPECTION

Inspection Date	
Name of Inspection Service	
Address	
Post Code	
Phone Number	
Inspector Name	
Inspection Report Number	
Remarks/recommendations Including maximum user height and maximum numbers)	

Airquee® Inflatable & Softplay Products

6. ACCIDENT REPORTING AND LOG

Deal with any casualties first but report the event after the incident. Reportable accidents which cause injury, including acts of violence and dangerous occurrences, should be notified to the enforcing authority by the 'responsible person' (who is likely to be either the controller or the operator).

Minor accidents should be recorded here and written statements from any staff members or witnesses obtained. You should also notify your insurance company.

Serious accidents that result in death, injury requiring hospital treatment etc., will need to be reported under the Reporting of Injuries, Diseases and Dangerous Occurrences Regulations 1995 (RIDDOR). For a full list of reportable injuries go to www.hse.gov.uk/riddor.

Date	
Reported By	
Reported To	
Description of Accident	

Airquee®
Inflatable & Softplay Products

Date	
Reported By	
Reported To	
Description of Accident	

Date	
Reported By	
Reported To	
Description of Accident	

Date	
Reported By	
Reported To	
Description of Accident	

Date	
Reported By	
Reported To	
Description of Accident	

Airquee®
Inflatable & Softplay Products

Date	
Reported By	
Reported To	
Description of Accident	

Date	
Reported By	
Reported To	
Description of Accident	

Date	
Reported By	
Reported To	
Description of Accident	

Airquee®
Inflatable & Softplay Products



SCAN ME!

The Airquee Operation Manual (the "Manual") is proprietary to Airquee Ltd. and no ownership rights are hereby transferred. No part of the Manual shall be used, reproduced, translated, converted, adapted, stored in a retrieval system, communicated or transmitted by any means, for any commercial purpose, including without limitation, sale, resale, licence, rental or lease, without the prior express written consent of Airquee Ltd.

Airquee Ltd. does not make any representations, warranties or guarantees, express or implied, as to the accuracy or completeness of the Manual. Users must be aware that updates and amendments will be made from time to time to the Manual. It is the user's responsibility to determine whether there have been any such updates or amendments. Neither Airquee Ltd. nor any of its directors, officers, employees or agents shall be liable in contract, tort or in any other manner whatsoever to any person for any loss, damage, injury, liability, cost or expense of any nature, including without limitation incidental, special, direct or consequential damages arising out of or in connection with the use of the Manual. All logos, images and content not owed by Airquee Ltd. are copyright to their respective owners and have been reproduced by permission.

Due to continual innovation and development the electronic version of our manual may contain additional information to the printed version.

Airquee Ltd, Duel House, Llandowlais Street, Cwmbran, NP44 7XB, UK

ver. Nov. 2020